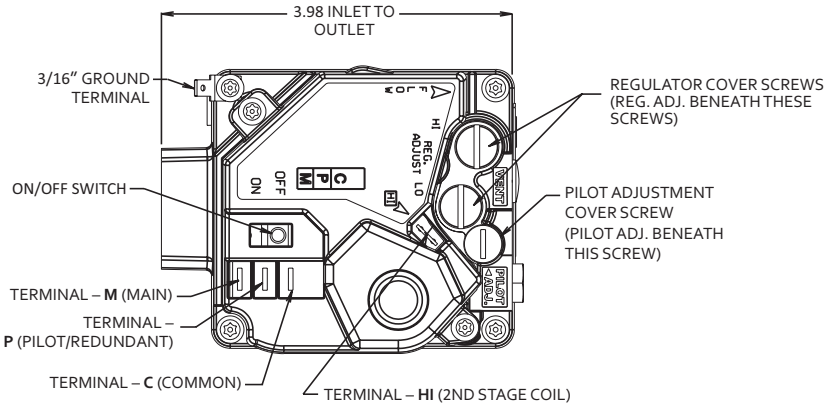

Features and Terminal Identification

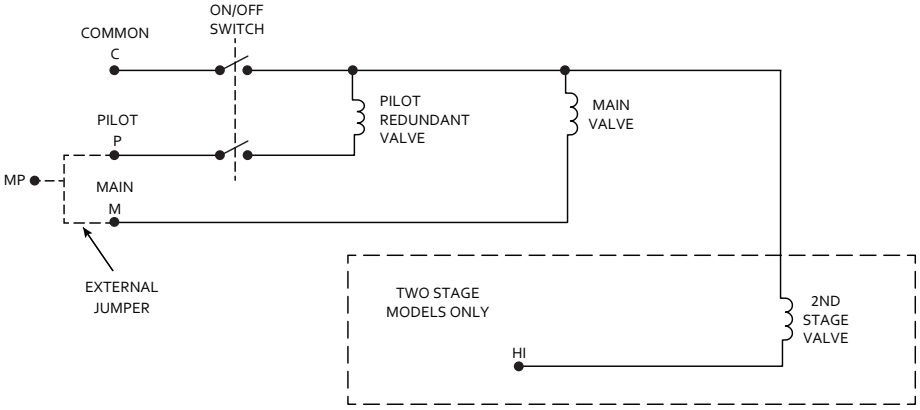
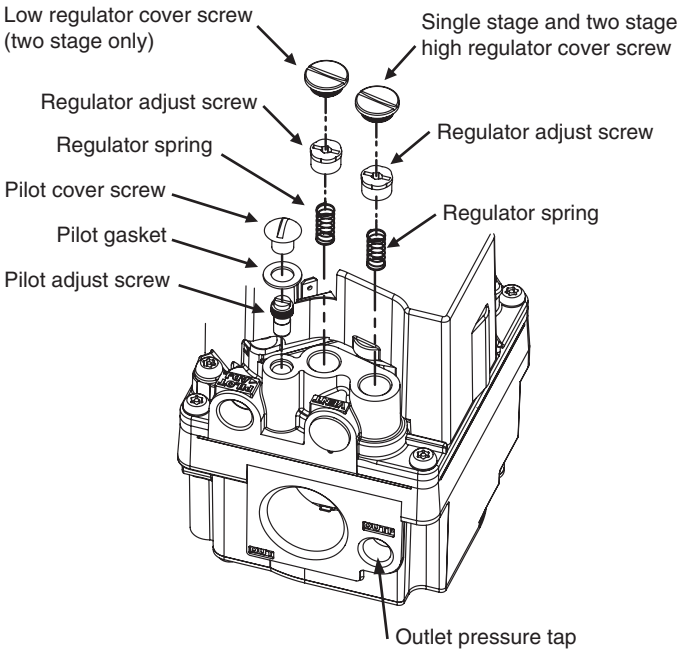
Simplified Gas Valve Internal Wiring and Terminal Identification