YELLOW JACKET®

BRUTE™ II Test & Charging Manifold

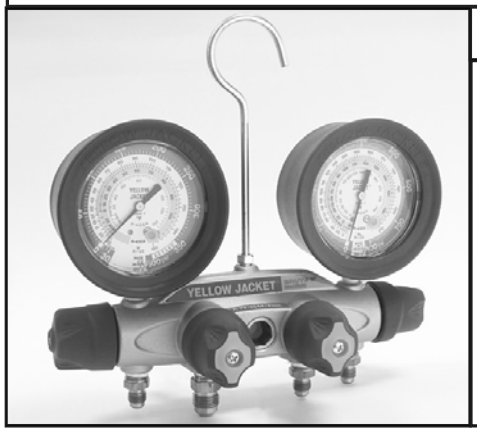

OWNER'S MANUAL

Due to the unusually high pressures and hazardous gasses used in refrigeration and air conditioning, only TRAINED refrigeration and air conditioning technicians should use this equipment. Proper procedures must be used.

Section 608 of the Federal Clean Air Act requires that all persons who maintain, service, repair, or dispose of appliances must be certified since November 14, 1994. Failure to comply can cost you and/or your company as much as $25,000 per day, per violation. The EPA also offers a reward up to $10,000 for providing information concerning violations to the Act.

PROCEDURES

Key:

No flow in hose	Closed valve
Flow in hose	Open valve

The various service and testing procedures below can be performed after the manifold gauge set has been installed as shown in the following diagrams.

1

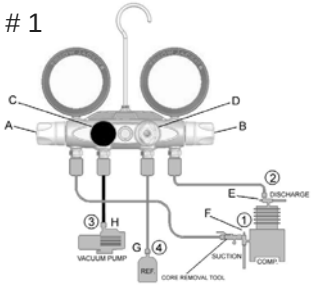

I. TO PURGE HOSES BEFORE HOOKING UP

1 & 2	Connect hoses at E & F; do not tighten
C & D	Close valves
4	Connect hose G to refrigerant
A & B	Open valves
D & G	Crack D & G valve to begin purge
E & F	Tighten hose

2

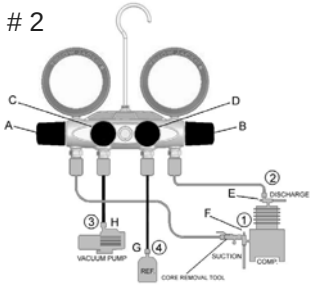

II. TO OBSERVE OPERATING PRESSURES

A & B	Close valves
C & D	Close valves
1 & 2	Connect hoses as illustrated
E & F	Crack open back seat

III. TO CHARGE REFRIGERATION SUCTION (VAPOR) SIDE WITH SCHRADERS

Purge as in I

Charge as in IV

4

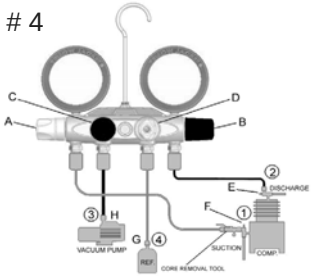

IV. TO CHARGE REFRIGERATION SUCTION (VAPOR) SIDE

	Purge as in I
4	Connect hose G to refrigerant
A	Open valve
B & C	Close valves
D	Open valve and throttle
F	Crack front seat

Over-pressuring the gauge voids warranty

PROCEDURES, cont.

5

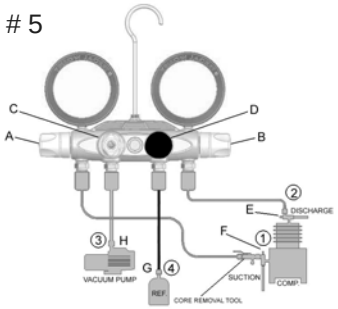

V. TO PULL VACUUM

D	Close valve
H	Connect hose 3 to pump
C	Open valve
A & B	Open valves
E & F	Mid position valves

#18975

Note: To improve pull down time, use core removal tool (to minimize restrictions), and use minimum 3/8"or larger hose.

VI. TO SET LOW SIDE CONTROL BUILD UP PRESSURE

Disconnect pressure control line. Using flare union, screw union into control line and other end of hose 1.

B, C & D	Close valves
A	Open valve
E	Back seat then crack open
F	Back seat F
B	Open to regulate pressure; set control

6

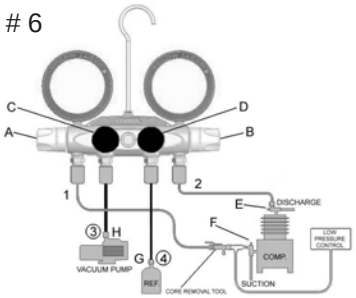

REMOVING THE MANIFOLD FROM THE SYSTEM

After completing service operations, you must remove the manifold from the system without losing refrigerant or admitting air.

- Close valves E & C.
- Then open manifold valves A, B and D, 1/2 turn.
- Close valve F.

This arrangement will move all the high-pressure refrigerant from the line and the high-pressure gauge and put it into the low side. Close all manifold valves and remove hoses.

PARTS LIST

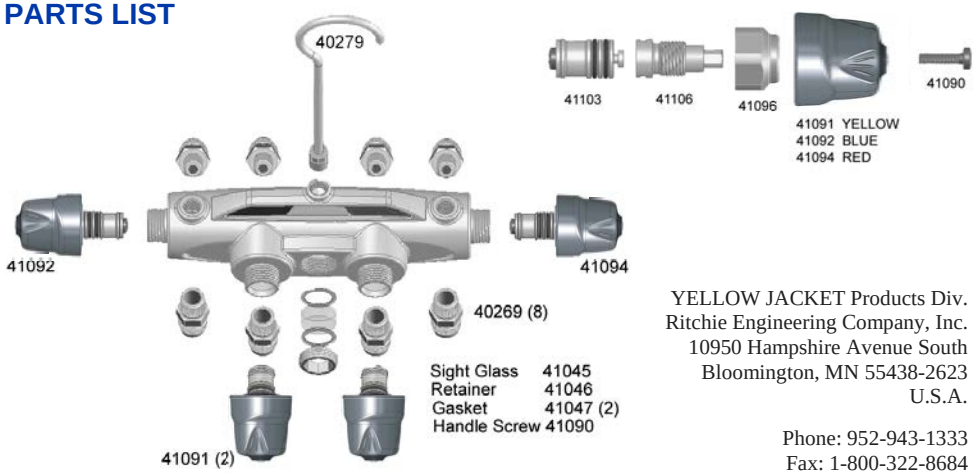

YELLOW JACKET Products Div.
Ritchie Engineering Company, Inc.
10950 Hampshire Avenue South
Bloomington, MN 55438-2623
U.S.A.

Phone: 952-943-1333
Fax: 1-800-322-8684
Int'l Fax: 952-943-1605

e-mail: custserv@yellowjacket.com
Web Site: www.yellowjacket.com

Printed in U.S.A. P/N 510079E